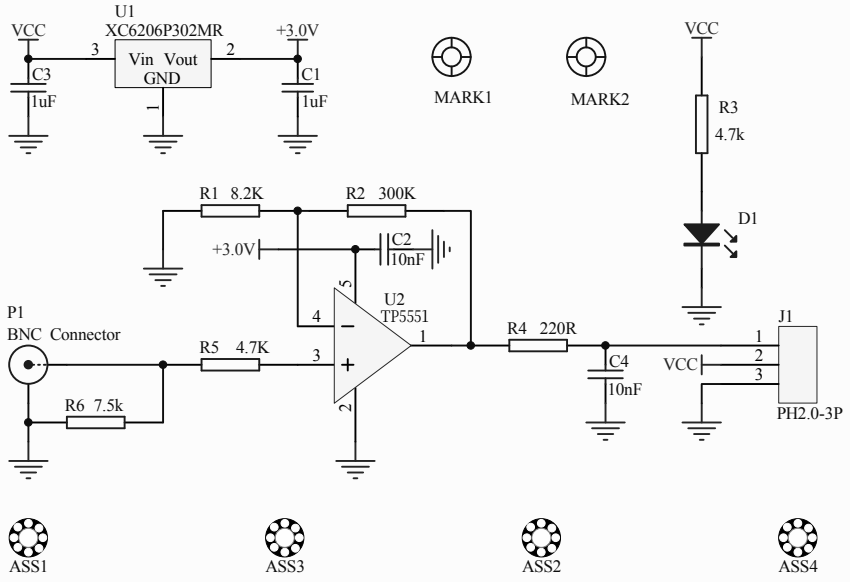

Title: *Gravity: Analog Dissolved Oxygen Sensor*			SKU: *SEN0237*
Drawn: *DongZi-CD*	Revision: *V1.0*		Size: *A4*
Page: *1 of 1*	Date: *2017-05-18*		Time: *13:06:22*