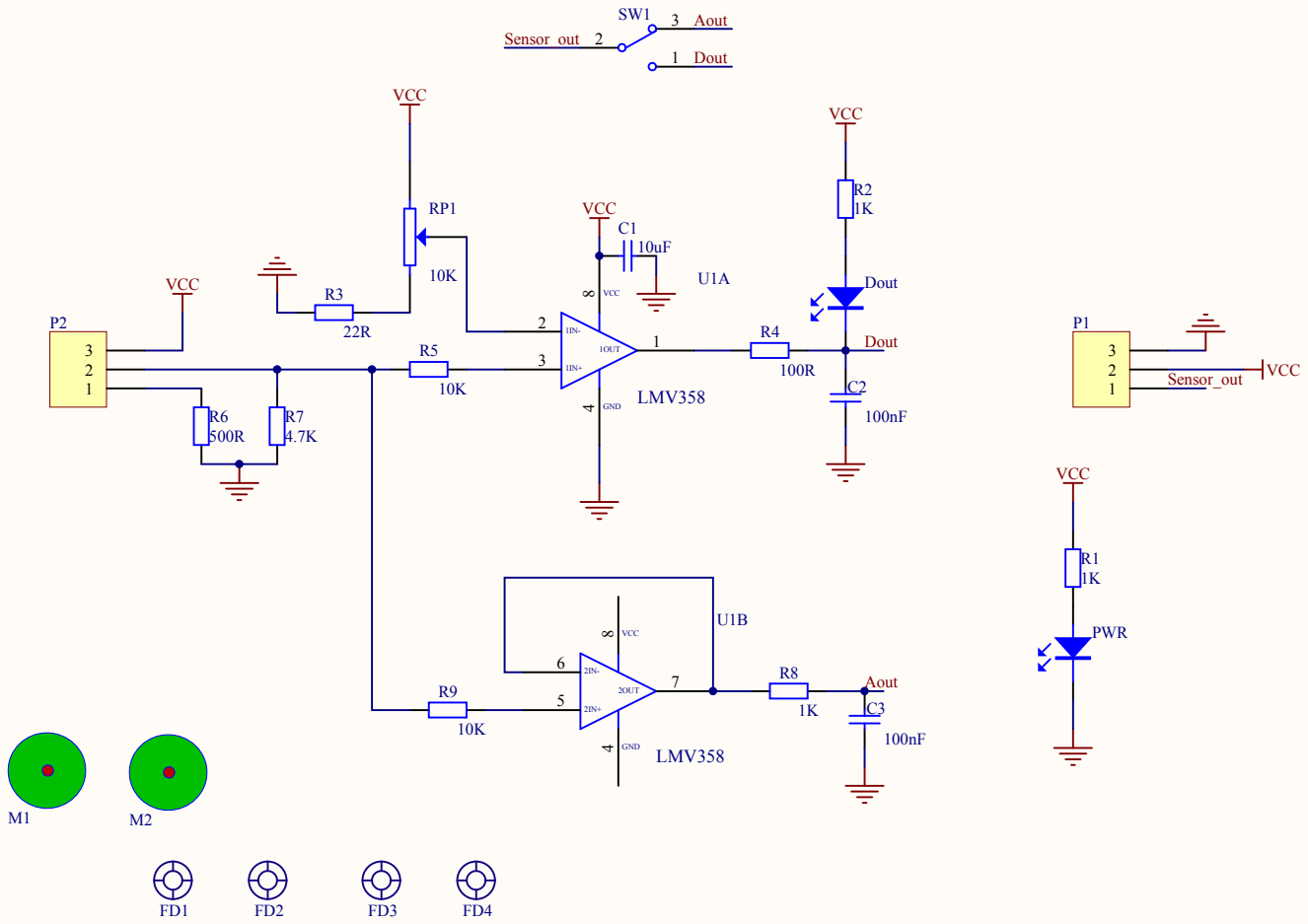

Title		
Size A4	Number	Revision
Date: 2015/6/19		Sheet of
File: E:\ \..\Turbidity sensor_V0.Drawing		Drawn by: