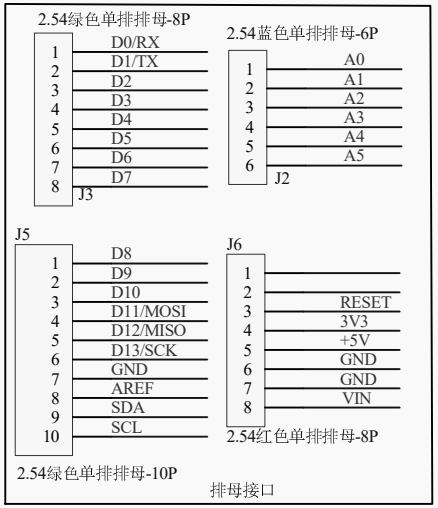

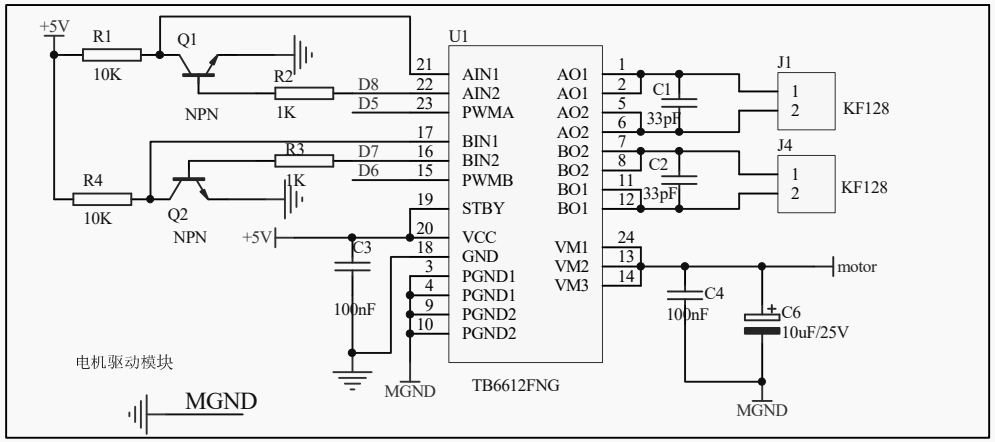

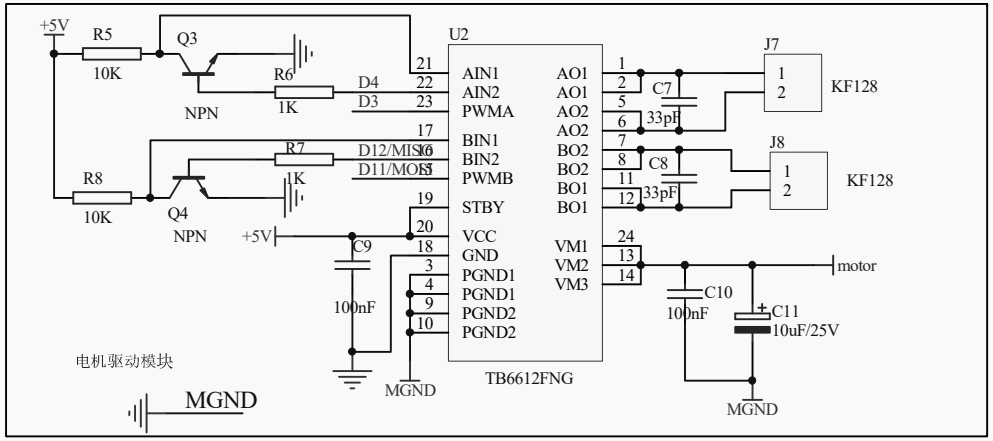

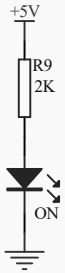

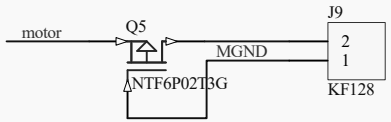

Title: *Quad Motor Driver Shield for Arduino*		SKU:	DRI0039
Drawn: LF-CD	Revision: V1.0	Size:	A4
Page: 1 of 1	Date: 2016/4/5	Time:	11:29:34