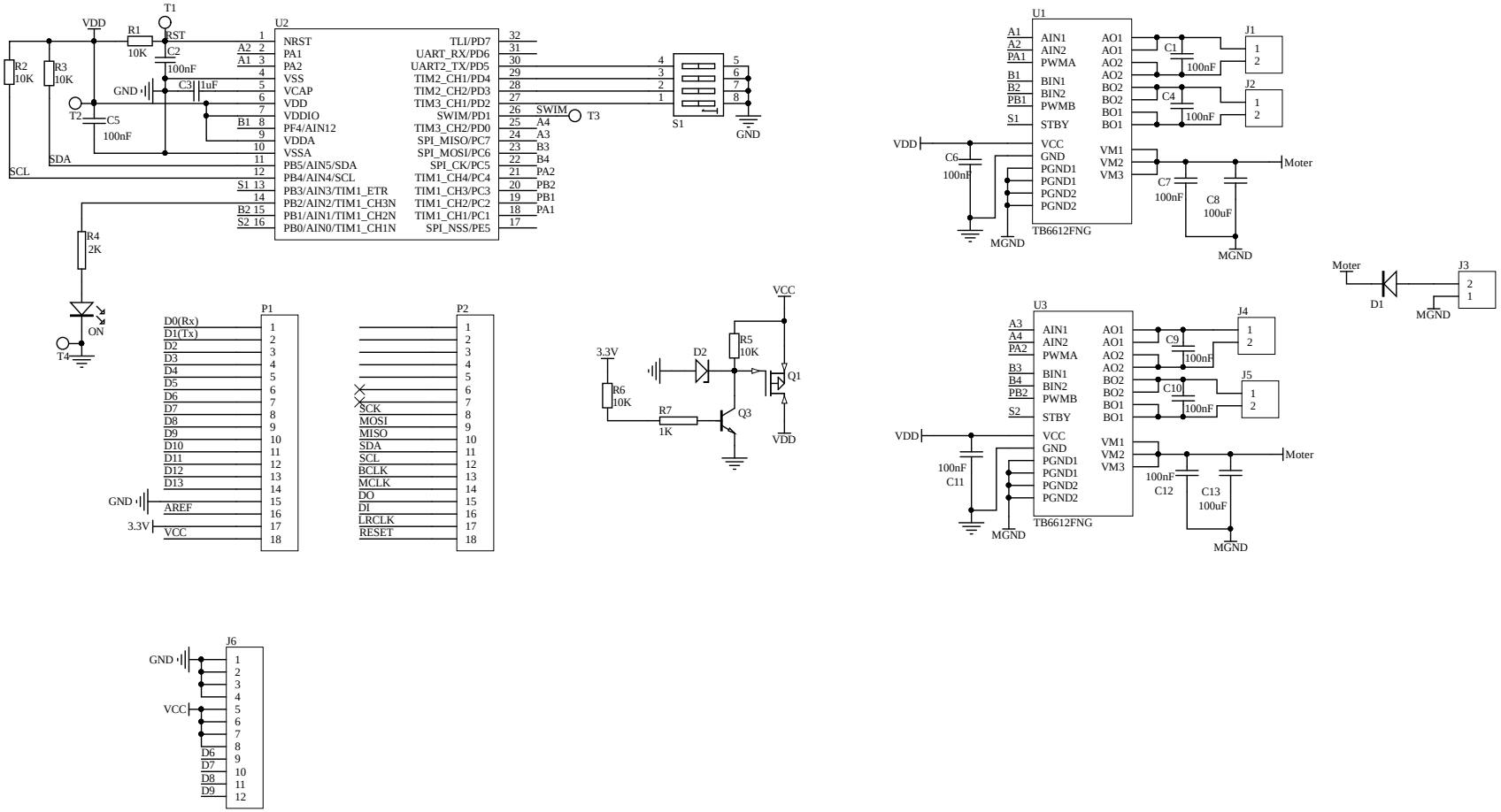

DFROBOT	Title: *FireBeetle Covers-DC Motor&Stepper Driver*		SKU: ***DFR0508***
	Drawn: ***HDJ-CD***	Revision: ***V1.0***	Size: ***A3***
	Page: ***1 of 1***	Date: *2017/9/13*	Time: ***14:41:30***