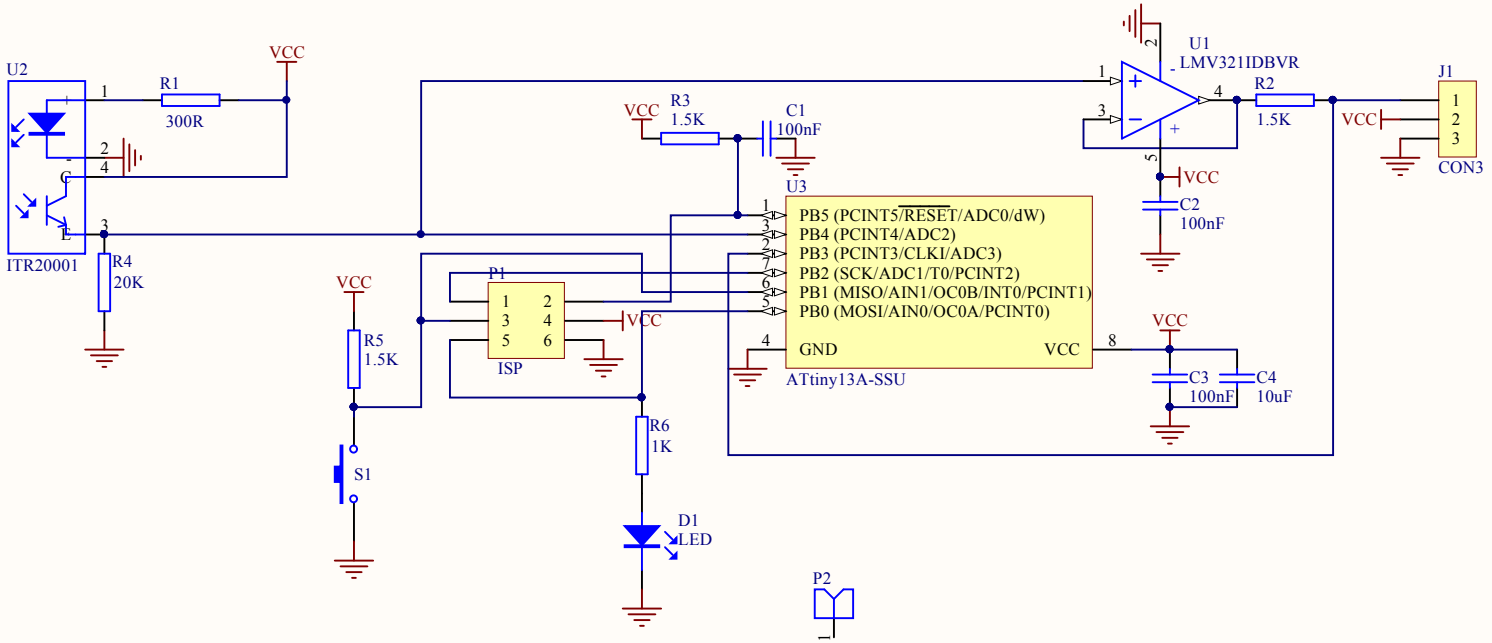

Title		
Size A4	Number	Revision
Date: 2013-4-18		Sheet of
File: C:\Documents and Settings\..\Smart Gray Sensor V1.0.SchDoc		Drawn By: