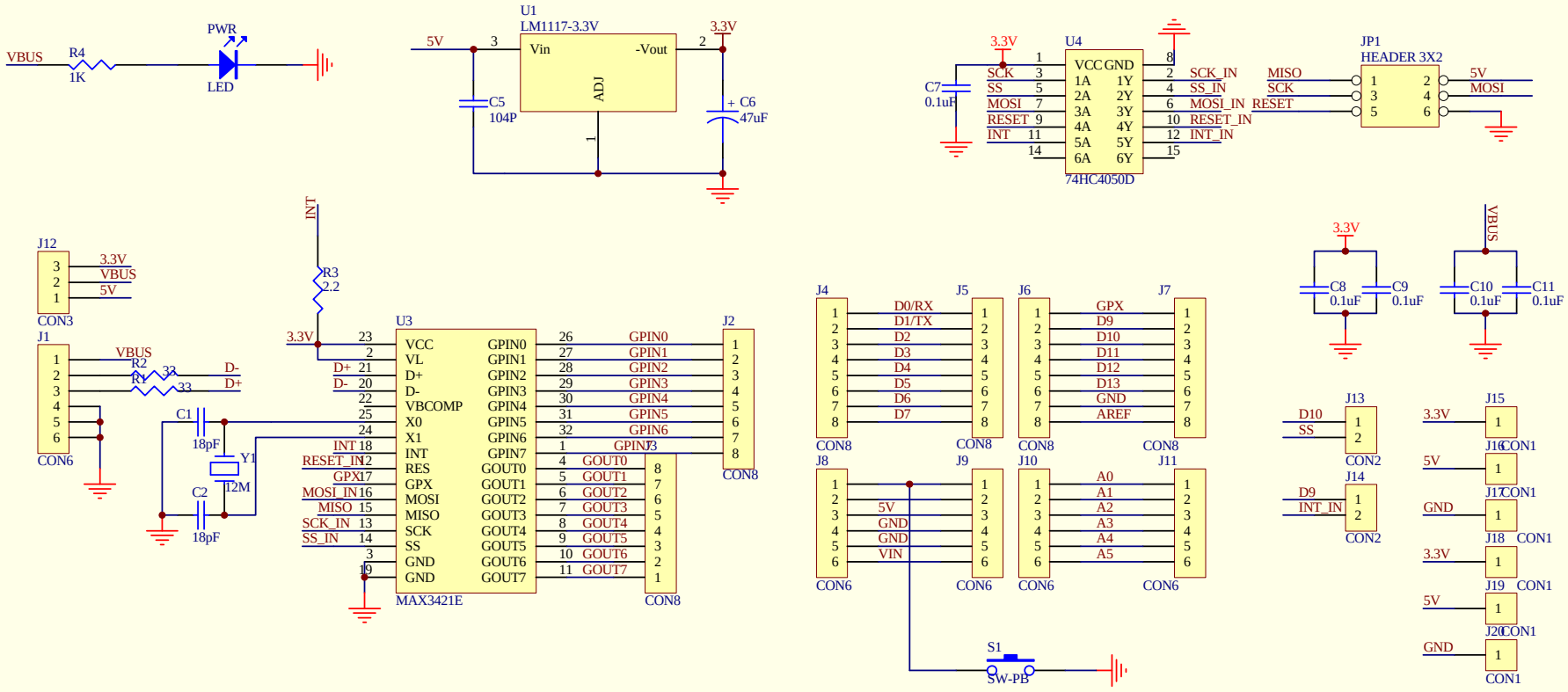


| Title | | |
|---|---|---|
| Size A4 | Number | Revision |
| Date: 25-Jun-2011 | | Sheet of |
| File: D:\产品记录\arduino\arduino_NG DM0916.DDB | | Drawn By: |