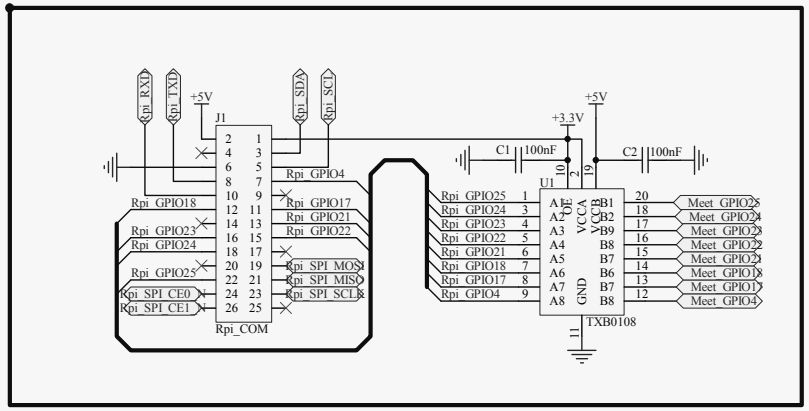

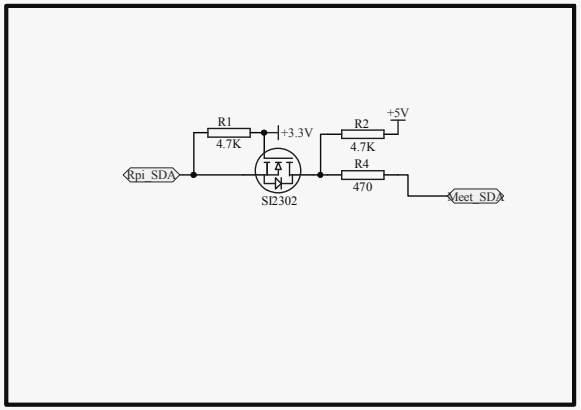

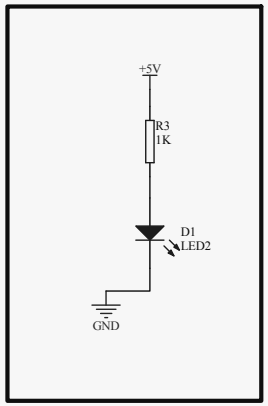

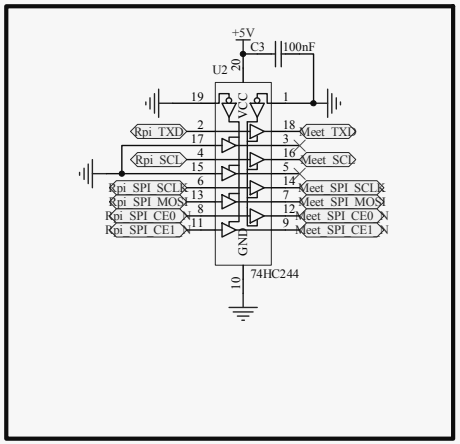

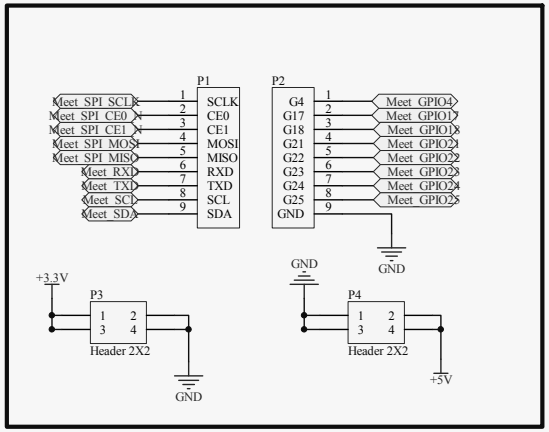

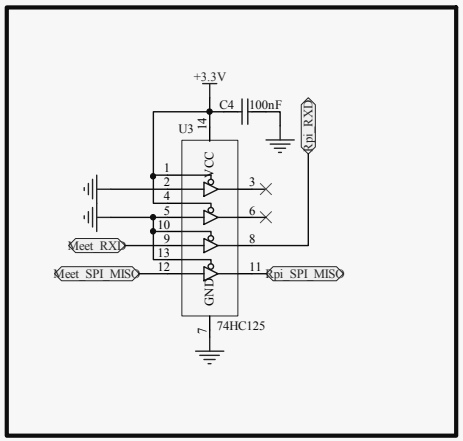

Title: Raspberry Pi GPIO Extension Board		Revision:	V1.0
Drawn: 范旭阳		Size:	A3
Page: 1 of 1	Date: 2014-5-23	Time:	10:09:44