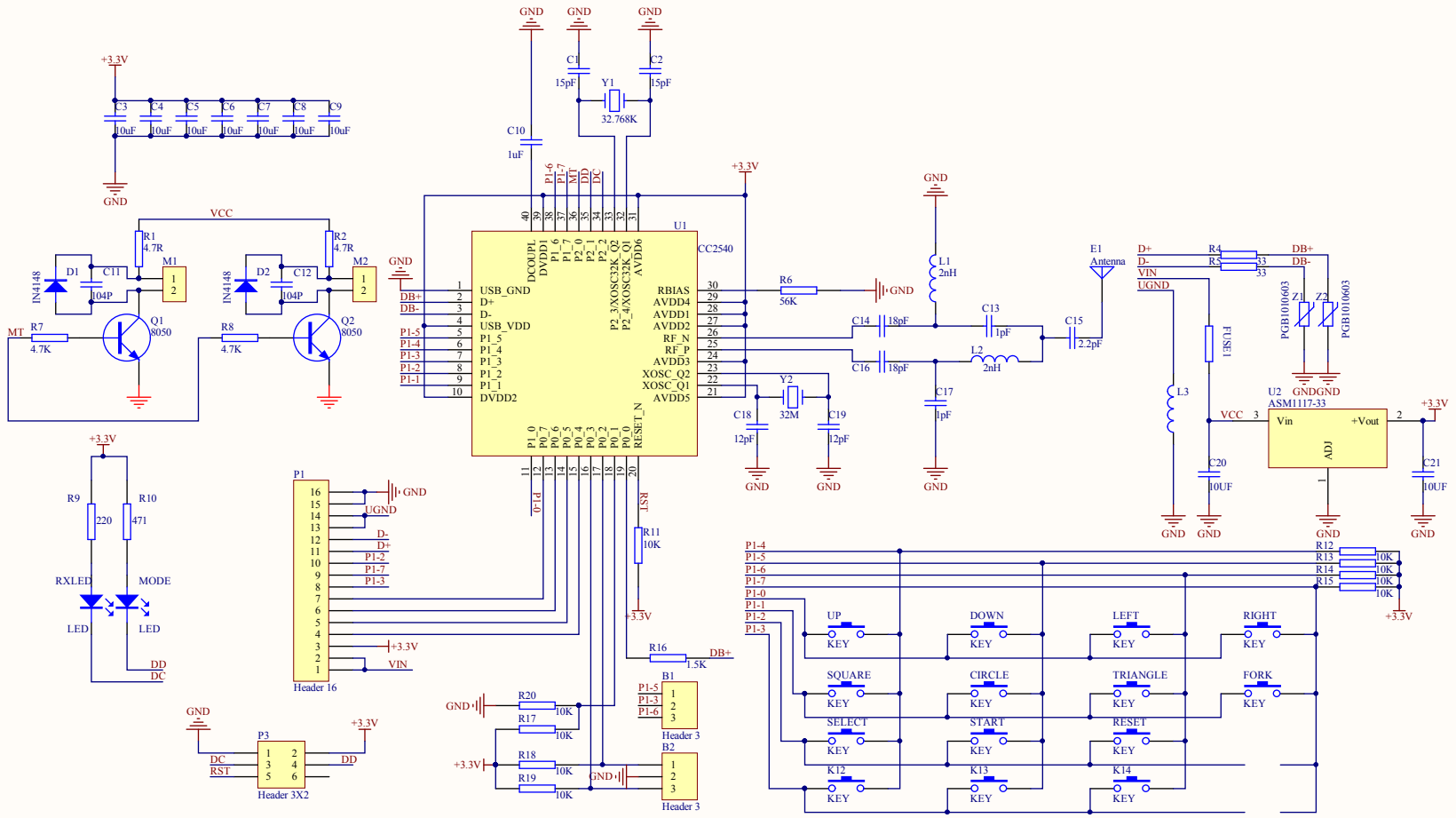

Title		
Size A3	Number	Revision
Date: 2015-08-12		Sheet of
File: F:\design\..\DFR0304 BLE Wireless JoyShield V2.0.SchDoc		Drawn By: